Product data sheet

119668EN-02
2023-10

ProNordic L310R

ART.NO. 155000



Air handling units with rotary heat exchanger for commercial buildings.

Nominal air volume 5 100 m³/h against 250 Pa.

Product features

- Units kept on stock at Flexit
- Flexible - impossible to order wrong variant
- Energy efficient and silent
- Easy control by Siemens Climatix

Automatic control

Choose between ProPanel and ProTouch control panel.



ProPanel



ProTouch

Description

Flexit ProNordic L310R is air handling units for commercial buildings kept on stock at Flexit.

Supplied as a right hand variant, but can be easily rebuilt on site to the left hand variant.

The after-heating battery (electric/water) is supplied with the units and installed on site.

The unit's compact physical dimensions simplifies transport and make the products flexible and adaptable to most installations.

The flexibility gives cost savings in the event of changes in projects and makes it impossible to order wrong variant.

The units can also be ordered pre-configured as desired, but with a certain delivery time.

Easy control with Siemens Climatix by control panel ProPanel or ProTouch.

Art.no.	GTIN	Model
155000	7023671550004	ProNordic L310R

Technical data

	η	SFP	Duct resistance	Airflow
PERFORMANCE	> 83 %	< 2.0	250 Pa	5 100 m³/h
	> 86 %	< 1.5	230 Pa	4 000 m³/h

		L310R with electric battery	L310R with water battery
POWER	Rated voltage (AC 50 Hz)	3N~400 V	3N~400 V
	Frequency	50 Hz	50 Hz
	Recommended fuse size	3 x 40 A	3 x 10 A
	Rated current	30,6 A	7,4 A
	Rated power, total	19 210 W	3 210 W
	Rated power, max. electric battery	16 000 W	-
	Rated power, fans	2 x 1 500 W (230 V)	2 x 1 500 W (230 V)
	Rated power, rotor motor	40 W	40 W
VENTILATION	Fan type	B-wheel	B-wheel
	Fan motor control	ModBus	ModBus
	Max. fan speed RPM	3 000	3 000
	Automatic control, standard	CS 2500	CS 2500
	Filter class	ePM1 55% (F7)	ePM1 55% (F7)
	Filter type (supply air/extract air)	Bag filter	Bag filter
DIMENSIONS	Filter dimensions (W x H x D)	592 x 592 x 640 mm	592 x 592 x 640 mm
	Gross unit weight	618 kg	618 kg
	Net unit weight inward transport	348 kg	348 kg
	Weight, fan	2 x 19 kg	2 x 19 kg
	Weight, rotor	108 kg	108 kg
	Weight, doors	4 x 21 kg, 2 x 20 kg	4 x 21 kg, 2 x 20 kg
	Duct connection	1 200 x 600 mm	1 200 x 600 mm
	Height	1 765 mm	1 765 mm
	Width	2 410 mm	2 410 mm
	Depth (with håndtage)	1 580 mm	1 580 mm
	Depth (without doors)	1 340 mm	1 340 mm

Dimensioned drawings

Dimensions in mm

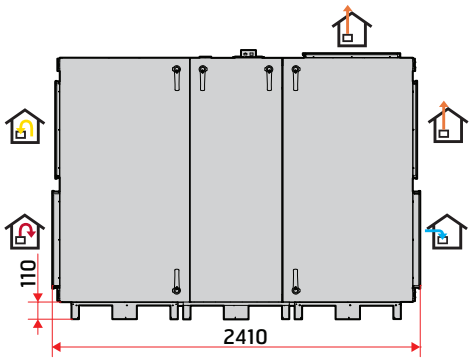

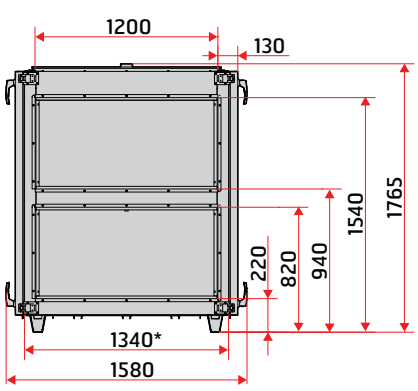

*without door

The dimensions are the same on both end sides.

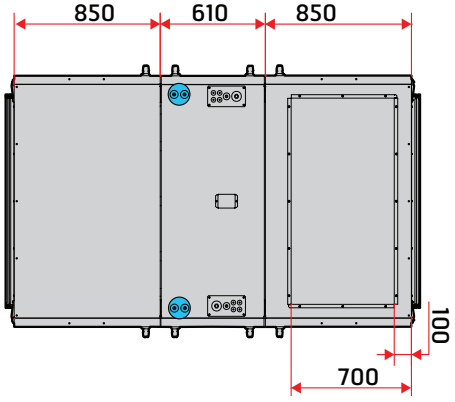

water connection points

FLEXIT

Capacity diagram

Supply air side

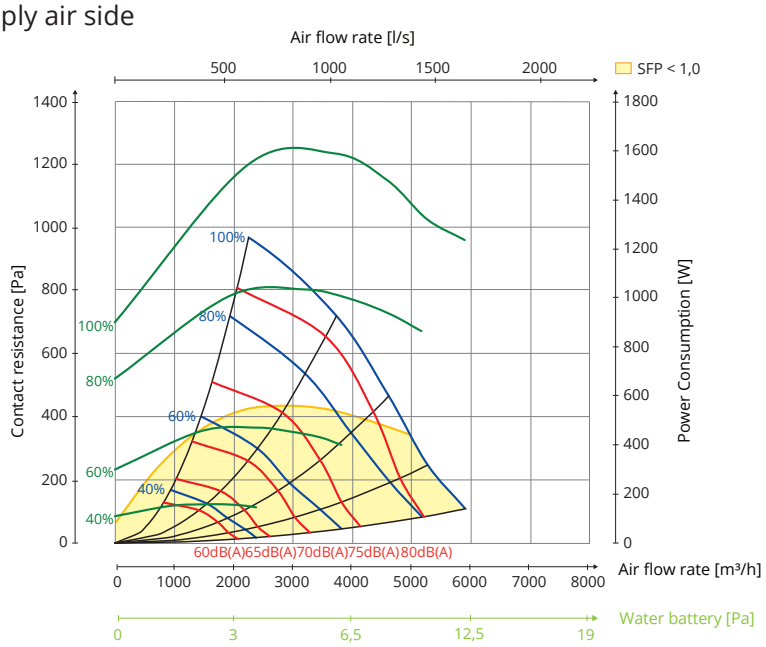

Extract air side

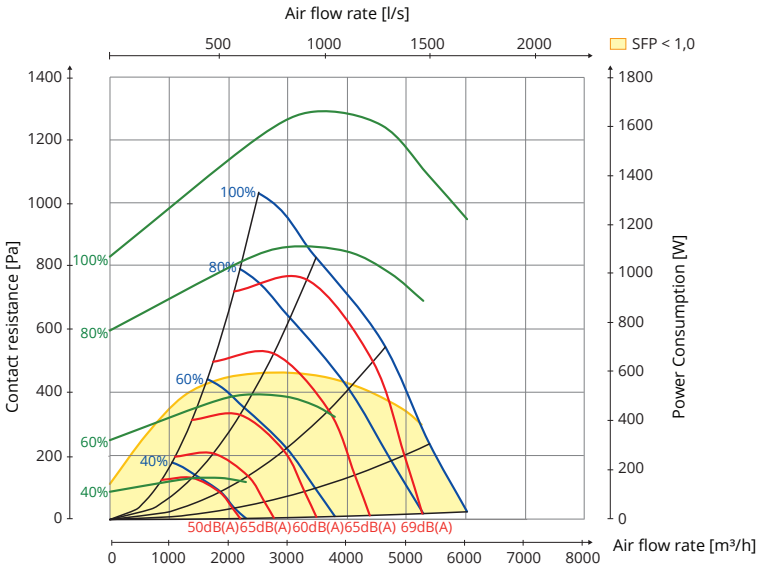

Hz	63 Lw(dB)	125 Lw(dB)	250 Lw(dB)	500 Lw(dB)	1000 Lw(dB)	2000 Lw(dB)	4000 Lw(dB)	8000 Lw(dB)	LwA (dBA)
Supply air	-4	0	-5	-5	-4	-8	-13	-16	
Extract air	10	12	-1	-7	-12	-16	-27	-33	
Extract air, top outlet	-48	-29	-31	-34	-37	-34	-42	-46	-30
Radiated sound	-30	-18	-16	-15	-22	-21	-24	-43	-14

For control and calculation of SFT_{INT} and SFP_{Limit} use FlexitSelect. Lw(A) is below 70 dB(A).

Explanation of diagram:
Sound data is specified as sound power level LwA in the capacity diagrams. (This is sound to duct.)

These values can be corrected by means of the table for the different octave bands in order to look at Lw (without adaptation to A band).

The correction table for the various octaves is stated in Lw, which means that the Lw values are after conversion of each octave for supply air and extract air.

Radiated sound from the unit must be calculated from the supply air diagram.

Unit	
155000	Air handling unit L310R

Tarvikkeet, Ilmanvaihtokone	
112672	Control panel, ProPanel
118257	Control panel, ProTouch
113841	Filter set F7
113869	Closing air damper Ø 500mm on/off
113870	Closing air damper Ø 500mm spring
118655	Electric heating battery, complete
113611	Water heating battery, complete
114121	Combined heating battery 900x600 left
114074	Combined heating battery 900x600 right
117858	Combined heating battery 1200x600 left
117857	Combined heating battery 1200x600 right
114158	Cooling battery 900x600 left
114073	Cooling battery 900x600 right
117856	Cooling battery 1200x600 left
117855	Cooling battery 1200x600 right
116482	Shunt valve KVS 0,4 3-way commercial
116483	Shunt valve KVS 1,0 3-way commercial
116484	Shunt valve KVS 1,6 3-way commercial
116485	Shunt valve KVS 2,5 3-way commercial
116486	Shunt valve KVS 4,0 3-way commercial
117209	Shunt valve KVS 6,3 3-way commercial
117860	Shunt valve KVS 10 3-way commercial
116487	Shunt valve KVS 0,4 2-way commercial
116488	Shunt valve KVS 1,0 2-way commercial
116489	Shunt valve KVS 1,6 2-way commercial
116490	Shunt valve KVS 2,5 2-way commercial
116491	Shunt valve KVS 4,0 2-way commercial
117208	Shunt valve KVS 6,3 2-way commercial
117859	Shunt valve KVS 10 2-way commercial
116492	Motor shunt valve 0-10V KVS ≤ 0,4
116493	Motor shunt valve on/off KVS ≤ 0,4
117207	Motor shunt valve 0-10V KVS ≥ 6,3

Accessories, control system CS2500	
112435	Modbus, communication module SP70
112438	BACnet IP, communication module
112439	Expansion module 14 IO
09368	Room sensor CC 1040
09369	Outdoor sensor CC 1041
09364	Press button
112442	Timer, electronic
112441	Timer, mechanical
09390	Motion detector SP 450
09358	Motion detector SP 435
09359	CO_2 sensor SP440
09861	Smoke detector SP445
112444	Pressure sensor 0-1250 Pa


ProPanel


ProTouch


Filter


Closing air damper


Water heating battery


Electric heating battery


Combined heating battery


Cooling battery


Shuntventil 2-way


Motor shunt valve 0,4 - 4,0


Shuntventil 3-way


Motor shunt valve 6,3 - 10


Modbus SP70


BACnet IP


Expansion module


Room sensor CC 1040


Outdoor sensor CC 1041


Press button


Timer electronic


Timer mechanical


Motion detector SP 450


CO_2 sensor SP 440


Smoke detector SP 445


Motion detector SP 435


Pressure sensor

For more information on topics including installation and wiring diagrams, see www.flexit.com

The product is listed in the database for building products that can be used in **Nordic Swan Ecolabelled buildings.**

Flexit AS
www.flexit.com

Our products are subject to continuous development and we therefore reserve the right to make changes.
We also disclaim liability for any printing errors that may occur.